Braukmann
D06FH-LF

High Pressure Reducing Valve - Lead-Free

With Balanced Seat

Application

According EN 806-2 pressure reducing valves of this type protect household water installations against excessive pressure from the supply. They can also be used for industrial or commercial applications within the range of their specification.

By installing a pressure reducing valve, pressurization damage is avoided and water consumption is reduced. The set pressure is also maintained constant, even when there is wide inlet pressure fluctuation. Reduction of the operating pressure and maintaining it at a constant level minimizes flow noise in the installation.

Special Features

- LEAD-FREE: Pb content of all materials in contact with medium less than 0.1 %
- Inlet pressure balancing – no influence on outlet pressure by fluctuating inlet pressure
- The valve insert is of high-quality synthetic material and can be fully exchanged
- The outlet pressure is set by turning the adjustment knob
- The adjustment spring is not in contact with the drinking water
- Integral fine filter
- Can be retrofitted with an inlet check valve
- All materials in contact with medium follow UBA and ACS conformity
- 5-year warranty

Technical Data

Medium	
Medium:	Drinking water
Connections/Sizes	
Connection size:	$^1/_2$" - 2"
Nominal sizes:	DN15 - DN50
Pressure values	
Max. inlet pressure:	25 bar
Outlet pressure:	1.5 - 12 bar
Preset outlet pressure:	5 bar
Min. pressure drop:	1 bar
Operating temperatures	
Max. operating temperature medium (10 bar):	70 °C
Max. operating temperature medium accord. to EN 1567:	30 °C

Construction

Overview

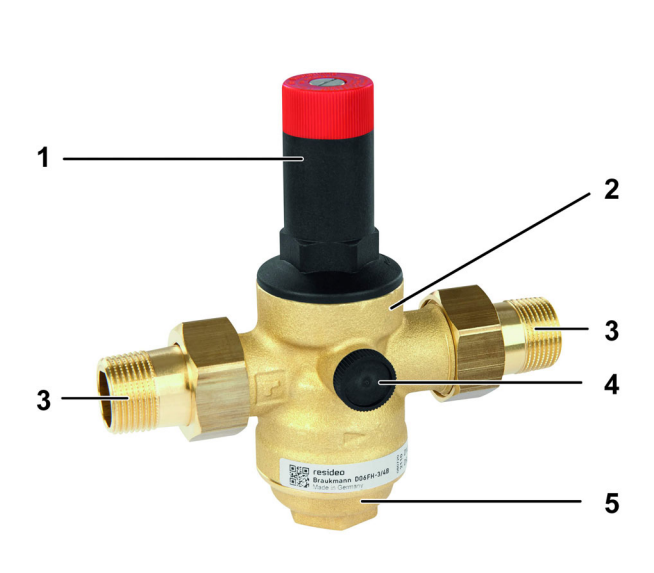

	Components	Materials
1	Spring bonnet with adjustment knob	High-quality synthetic material
2	Housing with pressure gauge connections on both sides	Lead-free brass
3	Threaded male connections	Lead-free brass
4	Pressure gauge connection port $^1/_4$" (pressure gauge see accessories)	High-quality synthetic material
5	Filter bowl	Lead-free brass
	Not depicted components:	
	Adjustment spring	Spring steel
	Valve insert complete with diaphragm and valve seat	High-quality syntheticmaterial, EPDM diaphragm
	Fine filter with 0.16 mm mesh	Stainless steel
	Seals	EPDM

Method of Operation

Spring loaded pressure reducing valves operate by means of a force equalising system. The force of a diaphragm operates against the force of an adjustment spring. If the outlet pressure and therefore diaphragm force fall because water is drawn, the then greater force of the spring causes the valve to open. The outlet pressure then increases until the forces between the diaphragm and the spring are equal again.

The inlet pressure has no influence in either opening or closing of the valve. Because of this, inlet pressure fluctuation does not influence the outlet pressure, thus providing inlet pressure balancing.

Transportation and Storage

Keep parts in their original packaging and unpack them shortly before use.

The following parameters apply during transportation and storage:

Parameter	Value
Environment:	clean, dry and dust free
Min. ambient temperature:	5 °C
Max. ambient temperature:	55 °C
Min. ambient relative humidity:	25 % *
Max. ambient relative humidity:	85 % *

*non condensing

Installation Guidelines

Setup requirements

- Horizontal and vertical installation position possible
- Install shut-off valves before and after D06FH for maintenance
- The installation location should be protected against frost and be easily accessible
  - Pressure gauge can be read off easily
  - Simplified maintenance and cleaning
- Install downstream of the filter or strainer
  - This position ensures optimum protection for the pressure reducing valve against dirt
- Provide a straight section of pipework of at least five times the nominal valve size after the pressure reducing valve (in accordance with EN 806-2)
- Requires regular maintenance in accordance with EN 806-5

Installation Example

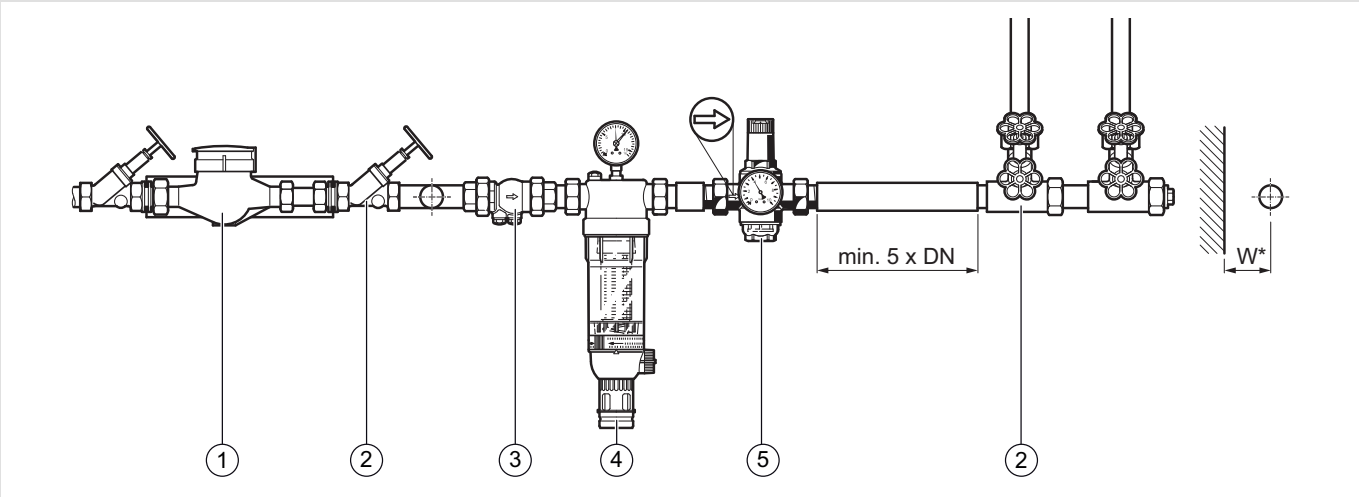

Fig. 1 Standard installation example for the pressure reducing valve

1 Water meter
2 Shut-off valve
3 Check valve
4 Filtering unit
5 Pressure reducing valve

Connection size:	1/2"	3/4"	1"	1 1/4"	1 1/2"	2"
Distance in mm (W*):	55	55	60	60	70	70

* Required installation distances between the centerline of the pipework and the surrounding in dependency of the connection size.

Technical Characteristics

Flow rates

Connection size:	1/2"	3/4"	1"	1 1/4"	1 1/2"	1"
k_{vs}-value (m^3/h):	2.4	3.1	5.8	5.9	12.6	12.0
Peak flow rate at 2m/s (m^3/h):	1.3	2.3	3.6	5.8	9.1	14
Peak flow rate at 3m/s (m^3/h):	1.8	3.3	5.4	8.6	13.7	21.1

Note: Peak flow rate of 2m/s applies to residential buildings in accordance with DIN EN 1567.
Peak flow rate of 3m/s applies to commercial systems in accordance with DIN 1988.

Pressure drop characteristics

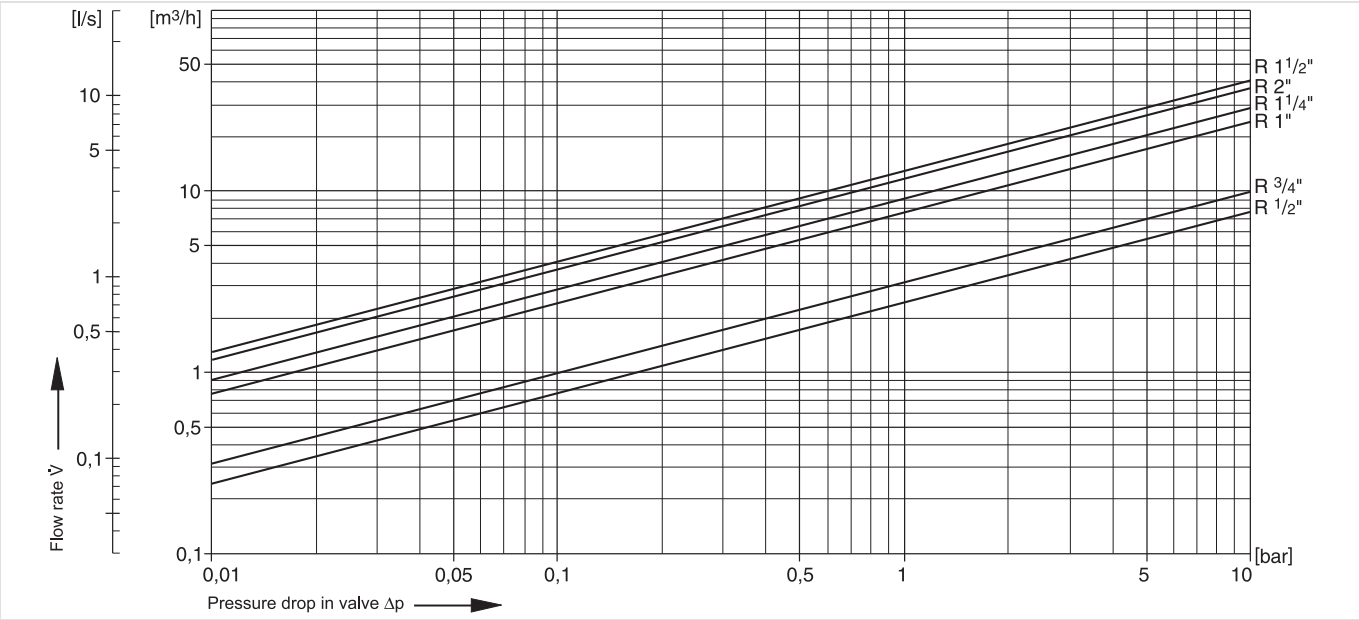

Fig. 2 Pressure drop within the valve in dependency of the flow rate and the used connection size

Dimensions

Overview

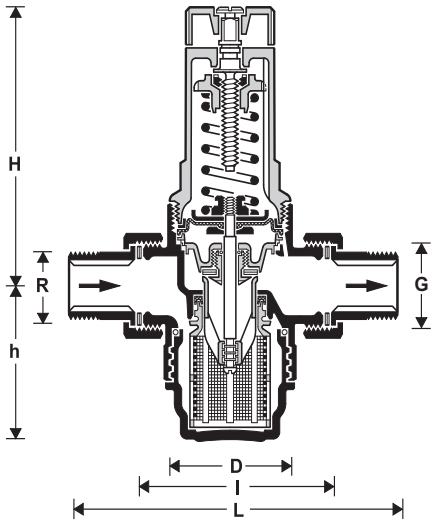

Parameter		Values					
Connection size:	R	1/2"	3/4"	1"	1 1/4"	1 1/2"	2"
	G	3/4"	1"	1 1/4"	1 1/2"	2"	2 1/2"
Nominal size diameter:	DN	15	20	25	32	40	50
Weight:	kg	0.8	1.0	2.2	2.4	3.4	5.1
Dimensions:	L	140	160	180	200	225	255
	I	80	90	100	105	130	140
	H	96	96	140	140	172	172
	h	56	56	77	77	113	113
	D	54	54	72	72	82	82

Note: All dimensions in mm unless stated otherwise.

Ordering Information

The following tables contain all the information you need to make an order of an item of your choice.

Options

The valve is available in the following sizes: 1/2", 3/4", 1", 1 1/4", 1 1/2" and 2".

		D06FH-...LFB
Connection type:	External threaded connection set on in- and outlet	•

Note: ...= connection size.

Note: Item number example for 1 1/4" and type B valve: D06FH-11/4LFB

Accessories

	Description		Dimension	Item No.
	M07M	**Pressure gauge** Housing diameter 63 mm, rear connection thread G $^{1}/_{4}$"		
		Range: 0 - 4 bar		M07M-A4
		Range: 0 - 10 bar		M07M-A10
		Range: 0 - 16 bar		M07M-A16
		Range: 0 - 25 bar		M07M-A25
	ZR06K	**Double ring wrench** For removal of spring bonnet and filter bowl		
				ZR06K
	VST06A	**Connection set** Threaded connections		
			$^{1}/_{2}$"	VST06-1/2LFA
			$^{3}/_{4}$"	VST06-3/4LFA
			1"	VST06-1LFA
			1$^{1}/_{4}$"	VST06-11/4LFA
			1$^{1}/_{2}$"	VST06-11/2LFA
			2"	VST06-2LFA

Spare Parts

Pressure Reducing Valve D06FH, from 1997 onwards

Overview

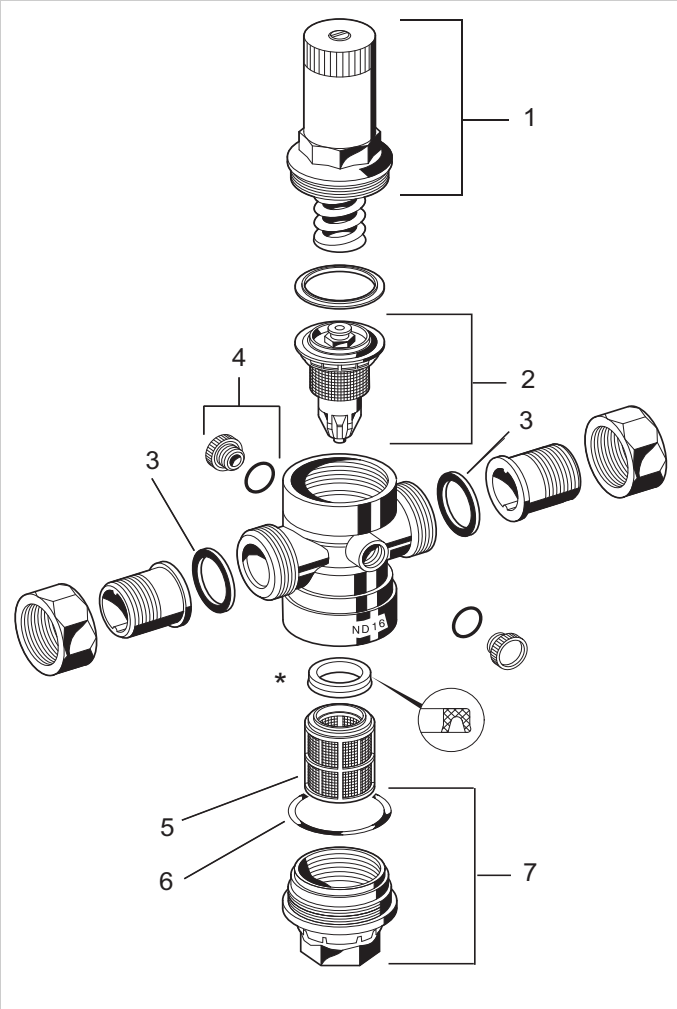

	Description	Dimension	Item No.
1	**Spring bonnet complete**		
		$^1/_2$" + $^3/_4$"	0900227
		1" + 1$^1/_4$"	0900228
		1$^1/_2$" + 2"	0900229
2	**Valve insert complete (without filter)**		
		$^1/_2$" + $^3/_4$"	D06FA-1/2LF
		1" + 1$^1/_4$"	D06FHA-1LF
		1$^1/_2$" + 2"	D06FA-11/2LF
3	**Union seal washer (10 pcs.)**		
		$^1/_2$"	0901443
		$^3/_4$"	0901444
		1"	0901445
		1$^1/_4$"	0901446
		1$^1/_2$"	0901447
		2"	0901448
4	**Blanking plug with O-ring G$^1/_4$" (5 pcs.)**		
		$^1/_2$" - 2"	S06K-1/4
5	**Replacement filter insert**		
		$^1/_2$" + $^3/_4$"	ES06F-1/2A
		1" + 1$^1/_4$"	ES06F-1A
		1$^1/_2$" + 2"	ES06F-11/2A
6	**O-ring set (10 pcs.)**		
		$^1/_2$" + $^3/_4$"	0901246
		1" + 1$^1/_4$"	0901247
		1$^1/_2$" + 2"	0901248
7	**Lead-free filter bowl with O-ring**		
		$^1/_2$" + $^3/_4$"	SM06T-1/2
		1" + 1$^1/_4$"	SM06T-1A
		1$^1/_2$" + 2"	SM06T-11/2

* included with 2

resideo

Ademco 1 GmbH, Hardhofweg 40,
74821 MOSBACH, GERMANY
Phone: +49 6261 810

Manufactured for and on behalf of
Pittway Sàrl, Z.A., La Pièce 6,
1180 Rolle, Switzerland
by its authorised representative
Ademco 1 GmbH

Subject to change. EN0H-1003GE23 R1125
© 2025 Resideo Technologies, Inc.
All rights reserved.

For more information

resideo.com

This document contains proprietary information of Pittway Sàrl and its affiliated companies and is protected by copyright and other international laws. Reproduction or improper use without specific written authorization of Pittway Sàrl is strictly forbidden.